GIOVENZANA INTERNATIONAL B.V.

DESCRIPTION	SCHEME	CONTACTS	CODE
ALARM Mushroom Button *ø40, flush, momentary, yellow colour*		1NO	**GM01FN3**

IP65

DESCRIPTION	SCHEME	CONTACTS	CODE
ALARM Button *ø30, flush, momentary, yellow colour*		1NC	**GM01RN3A**

IP65

DESCRIPTION	SCHEME	CONTACTS	CODE
ALARM Button *ø30, flush, momentary, yellow colour*		1NO	**GM01RN3A.1A**

DESCRIPTION	SCHEME	CONTACTS	CODE
Cam Switch 1-0-2 + Black knob ø35 *45° switching* *Spring return to the center*		1NO + 1NO	**GM092**

IP65

DESCRIPTION	SCHEME	CONTACTS	CODE
Emergency stop EN ISO 13850 *ø40 push-pull*		1NC + 1NO	**GM01P4NP**

IP65

DESCRIPTION	SCHEME	CONTACTS	CODE
Emergency stop EN ISO 13850 *ø40 push-pull with vision*		1NC + 1NO	**GM01P4SP**

DESCRIPTION	SCHEME	CONTACTS	CODE
Emergency stop EN ISO 13850 *ø40 twist to release*		1NC	**GM01R4NP**

DESCRIPTION	SCHEME	CONTACTS	CODE
Emergency stop EN ISO 13850 *ø40 twist to release*		1NC	**GM01R4N**

TECHNICAL DRAWING - GM01FN3

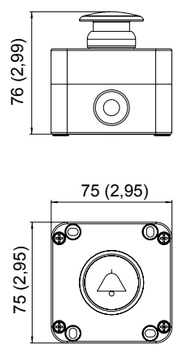

GM01RN3A / GM01RN3A.1.A

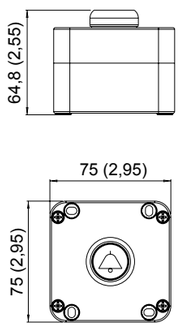

GM092

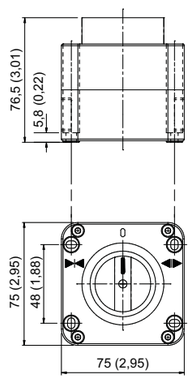

GM01P4NP

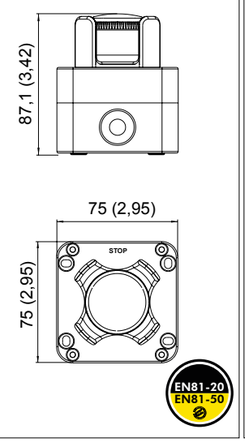

GM01P4SP

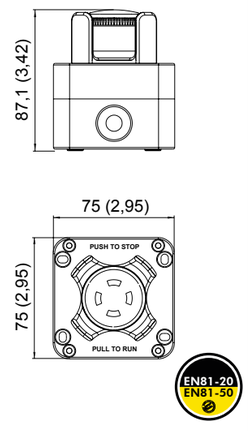

GM01R4NP

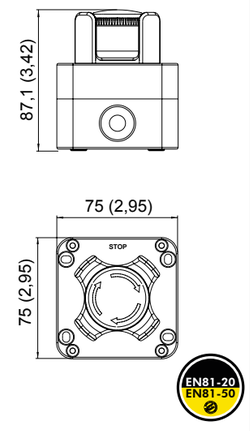

GM01R4N

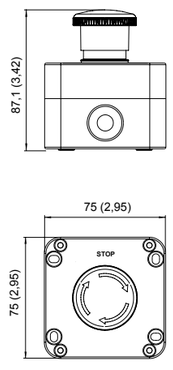

GIOVENZANA
INTERNATIONAL B.V.

DESCRIPTION	SCHEME	CONTACTS	CODE
Cam Switch 0-1 + Red knob ø35 *90° switching*		1NO	**GM353**

DESCRIPTION	SCHEME	CONTACTS	CODE
Cam Switch 0-1 + Red knob ø35 *90° switching*		2NO	**GM355**

IP65

DESCRIPTION	SCHEME	CONTACTS	CODE
With handle locked in stop position *90° switching*		1NO	**GM354**

DESCRIPTION	SCHEME	CONTACTS	CODE
With handle locked in stop position *90° switching*		2NO	**GM356**

IP65

DESCRIPTION	SCHEME		CODE
Emergency stop EN ISO 13850 *ø40 push-pull with vision*		1NC	
Schuko socket outlet 16A			**GM406/EU**
Cenelec socket outlet			**GM406/FR**
USA socket outlet			**GM406/US**
Swiss socket outlet			**GM406/SW**
UK standard socket outlet			**GM406/UK**
Australia & China standard socket outlet			**GM406/CH**

IP54

DESCRIPTION	SCHEME	CONTACTS	CODE
Emergency stop EN ISO 13850 *ø40 push-pull with vision*		1NC	
ALARM Button *ø30, flush, momentary, yellow colour*		1NC	
Schuko socket outlet 16A			**GM401/EU**
Cenelec socket outlet			**GM401/FR**
USA socket outlet			**GM401/US**
Swiss socket outlet			**GM401/SW**
UK standard socket outlet			**GM401/UK**
Australia & China standard socket outlet			**GM401/CH**

IP54

TECHNICAL DRAWING - GM353 / GM355

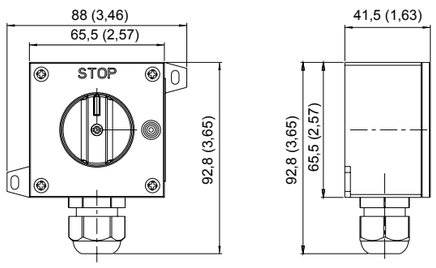

TECHNICAL DRAWING - GM354 / GM356

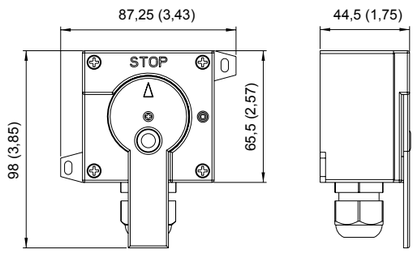

TECHNICAL DRAWING - GM406/..

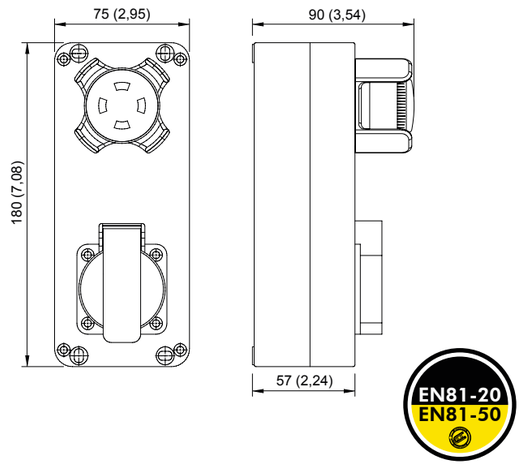

TECHNICAL DRAWING - GM401/..

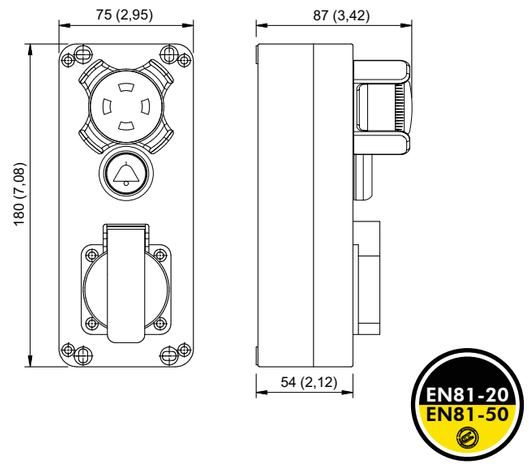

GIOVENZANA
INTERNATIONAL B.V.

IP54

DESCRIPTION	SCHEME	CONTACTS	CODE
Emergency stop EN ISO 13850 *ø40 push-pull with vision*		1NC	
Knob Selector 0-1 to 90° *2 positions, black + white indicator*		1NO	
Schuko socket outlet 16A			**GM403/EU**
Cenelec socket outlet			**GM403/FR**
USA socket outlet			**GM403/US**
Swiss socket outlet			**GM403/SW**
UK standard socket outlet			**GM403/UK**
Australia & China standard socket outlet			**GM403/CH**

IP54

DESCRIPTION	SCHEME	CONTACTS	CODE
Emergency stop EN ISO 13850 *ø40 push-pull with vision*		1NC	
ALARM lighted push button *flush, momentary, yellow colour*		1NO	
Schuko socket outlet 16A			**GM421/EU**
Cenelec socket outlet			**GM421/FR**
USA socket outlet			**GM421/US**
Swiss socket outlet			**GM421/SW**
UK standard socket outlet			**GM421/UK**
Australia & China standard socket outlet			**GM421/CH**

TECHNICAL DRAWING - GM403/..

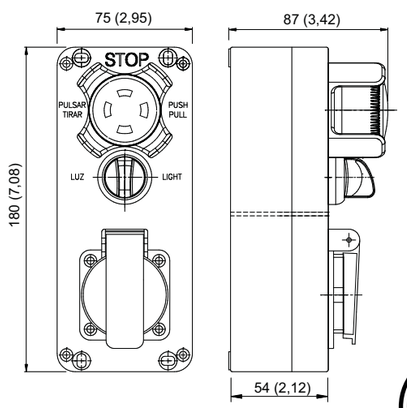

EN81-20
EN81-50

TECHNICAL DRAWING - GM421/..

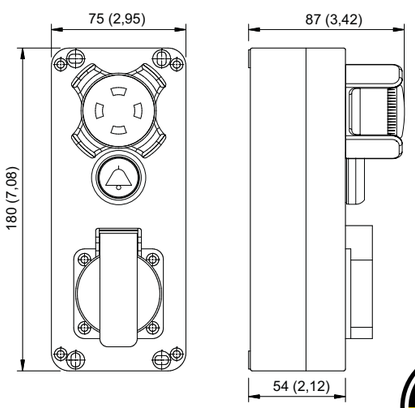

EN81-20
EN81-50

IP54

DESCRIPTION	SCHEME	CONTACTS	CODE
Emergency stop EN ISO 13850 *ø40 push-pull with vision*		1NC	
ALARM/LIGHT Dual Push Button *flush, momentary, yellow/blue colour*		2NO	
Schuko socket outlet 16A			**GM491/EU**
Cenelec socket outlet			**GM491/FR**
USA socket outlet			**GM491/US**
Swiss socket outlet			**GM491/SW**
UK standard socket outlet			**GM491/UK**
Australia & China standard socket outlet			**GM491/CH**

IP54

DESCRIPTION	SCHEME	CONTACTS	CODE
Emergency stop EN ISO 13850 *ø40 push-pull with vision*		1NC	
LIGHT push button *flush, momentary, black colour*		1NO	
Schuko socket outlet 16A			**GM250/EU**
Cenelec socket outlet			**GM250/FR**
USA socket outlet			**GM250/US**
Swiss socket outlet			**GM250/SW**
UK standard socket outlet			**GM250/UK**
Australia & China standard socket outlet			**GM250/CH**

TECHNICAL DRAWING - GM491/..

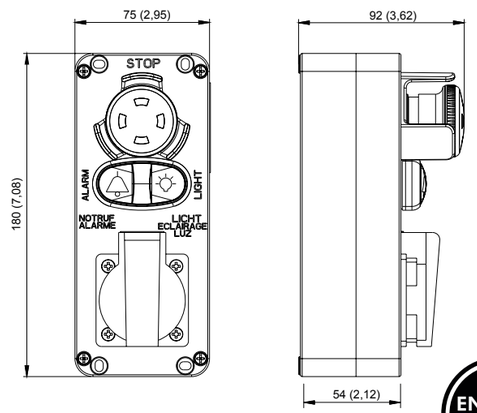

EN81-20
EN81-50

TECHNICAL DRAWING - GM250/..

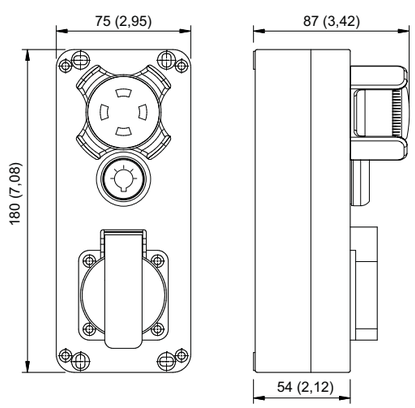

EN81-20
EN81-50

GIOVENZANA INTERNATIONAL B.V.

DESCRIPTION	SCHEME	CONTACTS	CODE
Cam Switch 1-2 *90° switching*		1NO+1NC	
Schuko socket outlet 16A			**GM243/EU**
Cenelec socket outlet			**GM243/FR**
USA socket outlet			**GM243/US**
Swiss socket outlet			**GM243/SW**
UK standard socket outlet			**GM243/UK**
Australia & China standard socket outlet			**GM243/CH**

IP54

DESCRIPTION	SCHEME	CONTACTS	CODE
LIGHT push button *flush, momentary, black colour*		1NO	
Schuko socket outlet 16A			**GM265/EU**
Cenelec socket outlet			**GM265/FR**
USA socket outlet			**GM265/US**
Swiss socket outlet			**GM265/SW**
UK standard socket outlet			**GM265/UK**
Australia & China standard socket outlet			**GM265/CH**

IP54

TECHNICAL DRAWING - GM243/..

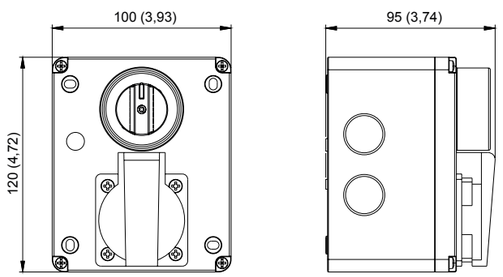

TECHNICAL DRAWING - GM265/..

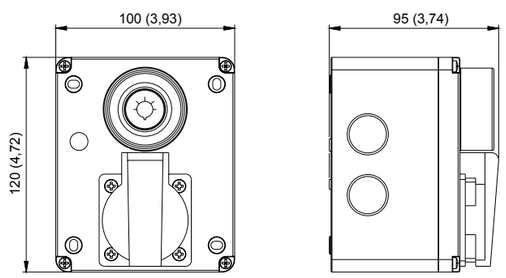

DESCRIPTION	SCHEME	CONTACTS	CODE
Red LED PILOT LIGHT *red colour*	AC/DC 24V		**GM419**
Green LED PILOT LIGHT *green colour*	AC/DC 24V		
BUZZER *AC/DC 12-24V*			

IP65

DESCRIPTION	SCHEME	CONTACTS	CODE
Green LED PILOT LIGHT *green colour*	AC/DC 24V		**GM219**
Red LED PILOT LIGHT *red colour*	AC/DC 24V		

IP65

DESCRIPTION	SCHEME	CONTACTS	CODE
Emergency stop EN ISO 13850 *ø40 push-pull*		2NC	**GML001P**
Transparent box GREEN LED PCB *12 VDC / 24 VDC*	**FUNCTION:** Fixed green light with mushroom released		
Transparent box GREEN LED PCB *12 VDC / 24 VDC*	**FUNCTION:** Flashing red light with mushroom activated		

IP65

TECHNICAL DRAWING - GM419

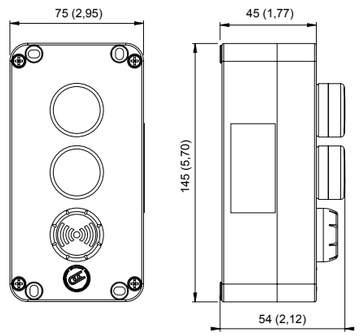

TECHNICAL DRAWING - GM219

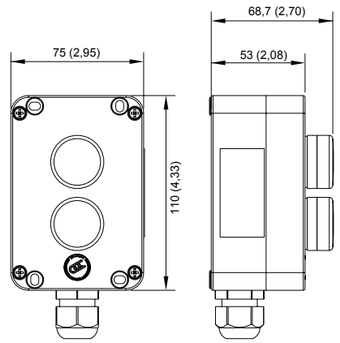
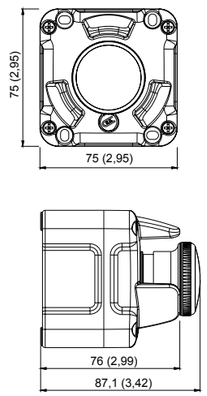
TECHNICAL DRAWING - GML001P